SITE PLAN
REQUEST TO AUTHORIZE AN ADDITION TO SECURITY SYSTEM
CAMPING WORLD RV SALES
2802 S. 21ST STREET
COUNCIL BLUFFS, IA 51501

GRAPHIC SCALE
1 inch = 40 ft.

REGISTERED PROFESSIONAL ENGINEER
NICHOLAS CLAY JASPER
16414
IOWA
Expires: 12/31/17

6617

LEGEND
- ROW LINE
- CENTERLINE
- PROPERTY LINE
- SETBACK
- LANDSCAPE EASEMENT
- EXISTING SCREEN FENCE
- EXISTING FENCE
- PROPOSED ELECTRIC FENCE

LS = LANDSCAPE AREA

#	DATE / DESCRIPTION

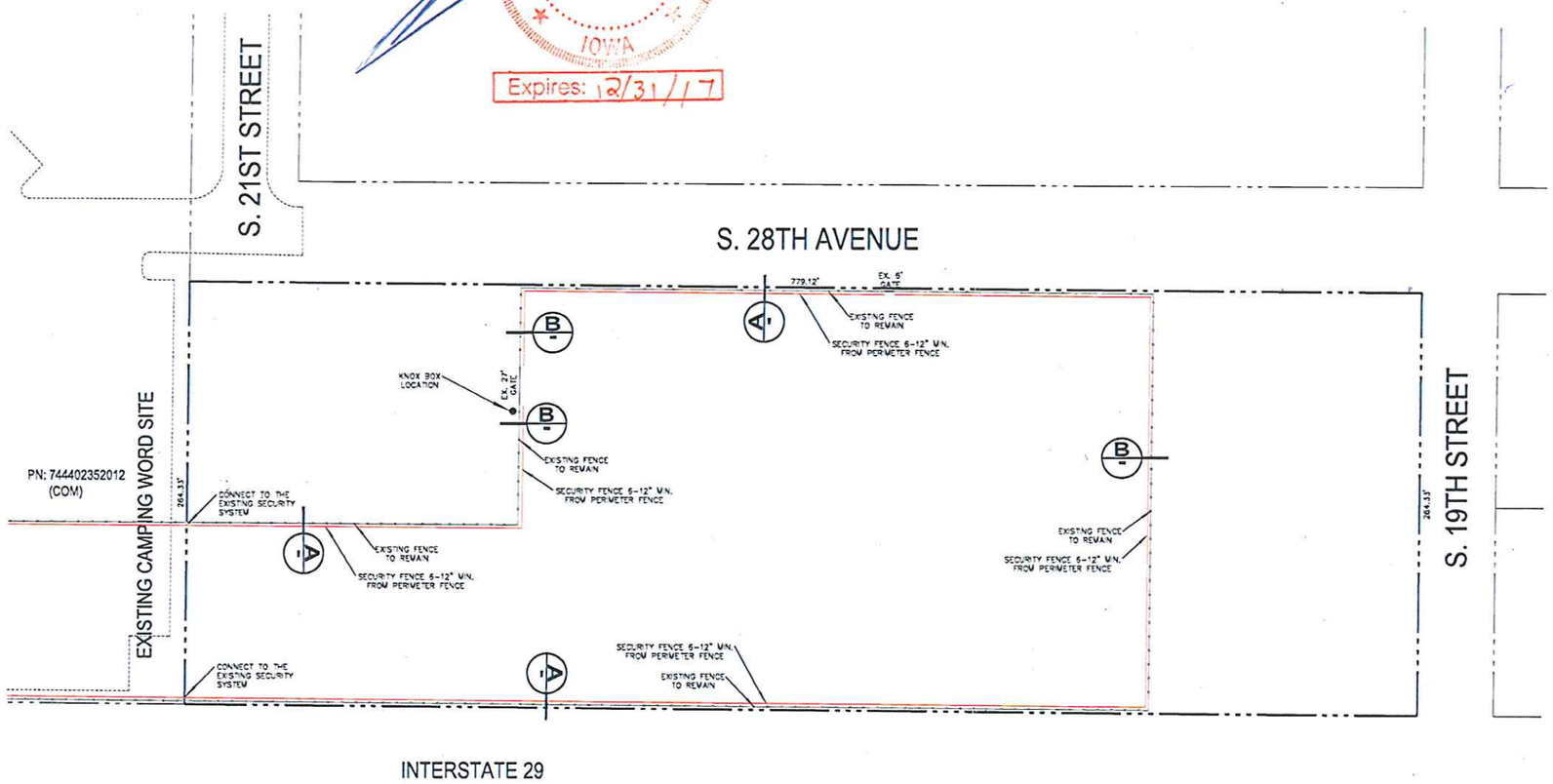

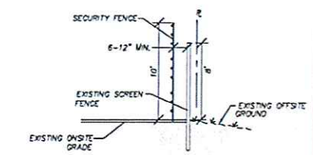

A EXISTING PERIMETER FENCE SECTION
N.T.S.

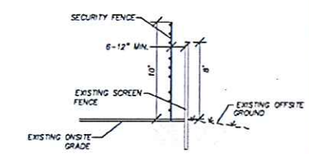

B EXISTING PERIMETER FENCE SECTION
N.T.S.

Electric Guard Dog
7608 Fairfield Road
Columbia, SC 29203
PHONE: 803-786-6333
FAX: 803-404-5378

PROJECT DATA

PN	744402384003
ACREAGE:	4.72 +/- NET ACRES 4.72 +/- GROSS ACRES
BUILDING FOOTPRINT:	0 TOTAL S.F.
LOT COVERAGE:	0% COVERAGE
ZONING:	EXISTING: I-1 PROPOSED: I-1
PARKING:	REQUIRED: N/A PROVIDED: N/A
MINIMUM FENCE SETBACKS:	STREET – 1' REAR – 1' SIDE – 1'

NOTES:

POLE LOCATIONS:
STEEL POLES: TO BE LOCATED APPROXIMATELY ON EACH SIDE OF GATE(S) & EVERY 90' (OR GREATER) TURN IN FENCE LINE. FIBERGLASS/INTERMEDIATE POLES: TO BE LOCATED APPROXIMATELY EVERY 30'

DISCLAIMER:
POLE LOCATIONS MAY SLIGHTLY DEVIATE FROM STIPULATIONS ABOVE DUE TO ON-SITE CONDITIONS"

DISPLAY WAY - EXISTING PERIMETER ELEVATION - NOTE SEPRATION BETWEEN WROUGHT IRON RODS IS 4" THEREFORE MESH TO DECREASE THE OPENING TO 2" MAX
N.T.S.

KNOX Instructions:

PE & P2 Disconnect Switch will be installed at main gate for emergency cut off of Electric Guard Dog fence.

When entering the property:
1. Key Switch will be turned to the OFF position to turn the security fence OFF.
2. Disconnect Switch is installed at above box at normal center.
3. Disconnect Switch is labeled – Disconnect Switch
4. Turn Disconnect Switch to OFF position to see and disconnect security fence.

When leaving the property:
1. Turn Disconnect Switch back to ON position to energize the security fence.
2. Turn Key Switch back to ON position to have the security fence ON.

PROPERTY OWNER
Camping World RV Sales
2802 S 21st St
Council Bluffs IA 51501

STORM DRAIN:
THERE IS NO EXISTING STORM DRAIN ADJACENT TO THE PROPERTY. NO STORM DRAIN IS BEING PROPOSED AS PART OF THIS PROJECT.

UTILITY RIGHT-OF-WAY/EASEMENTS NOTE:
THERE ARE NO UTILITY RIGHT-OF-WAY OR EASEMENTS LOCATED ON THE PROPERTY.

DRAINAGE/IRRIGATION NOTE:
THIS PROPERTY IS NOT LOCATED IN THE 100-YEAR FLOOD ZONE. THERE ARE NO IRRIGATION OR DRAINAGE EASEMENTS ON THE PROPERTY.

LANDSCAPE/RESERVATIONS NOTE:
ALL COMMON AREA LANDSCAPE WILL BE MAINTAINED BY A LANDSCAPE MAINTENANCE ASSOCIATION. THERE ARE NO RESERVATIONS FOR PARKS, SCHOOLS OR OTHER PUBLIC USES.

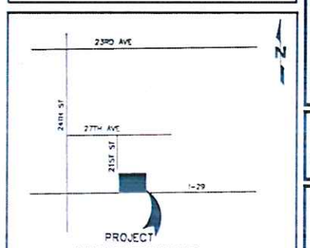

VICINITY MAP
NOT TO SCALE

PROJECT: **REQUEST TO AUTHORIZE AN ADDITION TO SECURITY SYSTEM**
2802 S. 21ST STREET
COUNCIL BLUFFS, IA 51501
PN: 744402384003

SHEET TITLE: **SITE PLAN**

DATE: MAY 23, 2017
SCALE: 1" = 40'

SHEET **1 OF 4**

CASE #BA-17-003 ATTACHMENT C

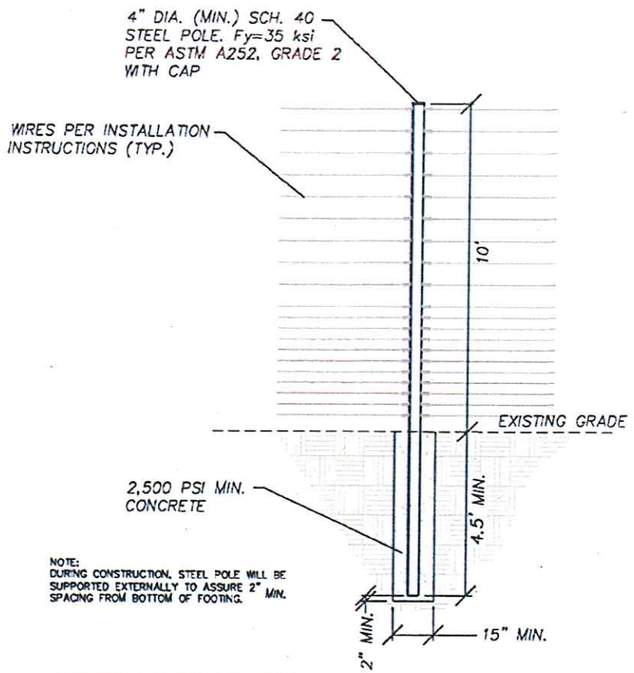

NOTE:
DURING CONSTRUCTION, STEEL POLE WILL BE SUPPORTED EXTERNALLY TO ASSURE 2" MIN. SPACING FROM BOTTOM OF FOOTING.

STEEL POLE DETAIL (STRUCTURAL)

NTS

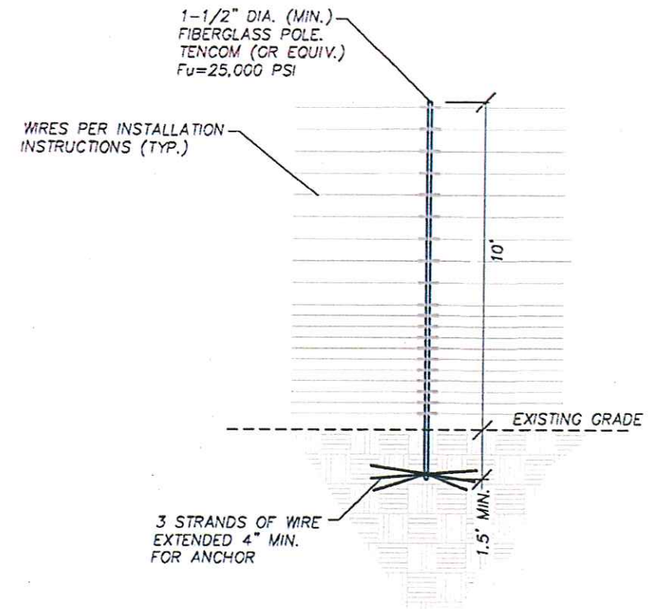

FIBERGLASS POLE DETAIL (NON-STRUCTURAL)

NTS

NOTE:
BOTH ENGLISH AND SPANISH VERSION OF THE "WARNING SIGN" WILL BE PLACED EVERY 60 FEET MAXIMUM..

EXAMPLE WARNING SIGNS

NTS

6-6-17

REGISTERED PROFESSIONAL ENGINEER
NICHOLAS J. JASPER
16414
IOWA

Expires: 12/31/17

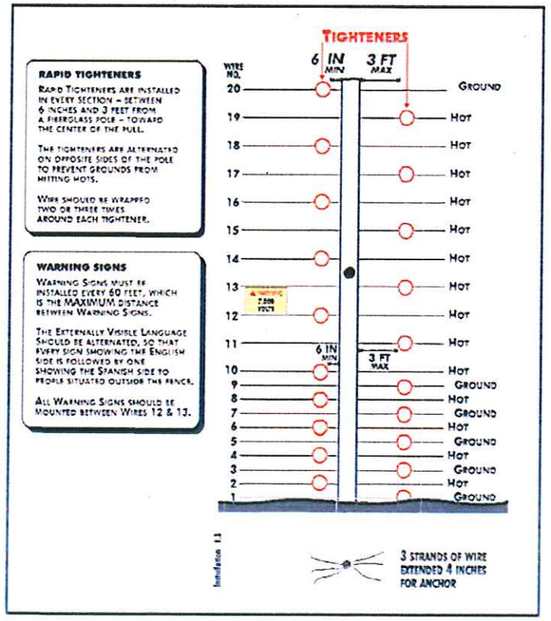

WIRE CONNECTIONS

NTS

#	DATE / DESCRIPTION

Electric Guard Dog
7608 Fairfield Road
Columbia, SC 29203
PHONE: 803-786-6333
FAX: 803-404-5378

PROJECT: REQUEST TO AUTHORIZE AN ADDITION TO SECURITY SYSTEM
2802 S. 21ST STREET
COUNCIL BLUFFS, IA 51501
PN: 744402384003

SHEET TITLE: TYPICAL DETAILS

DATE: MAY 23, 2017
SCALE: N/A

SHEET
2 OF 4

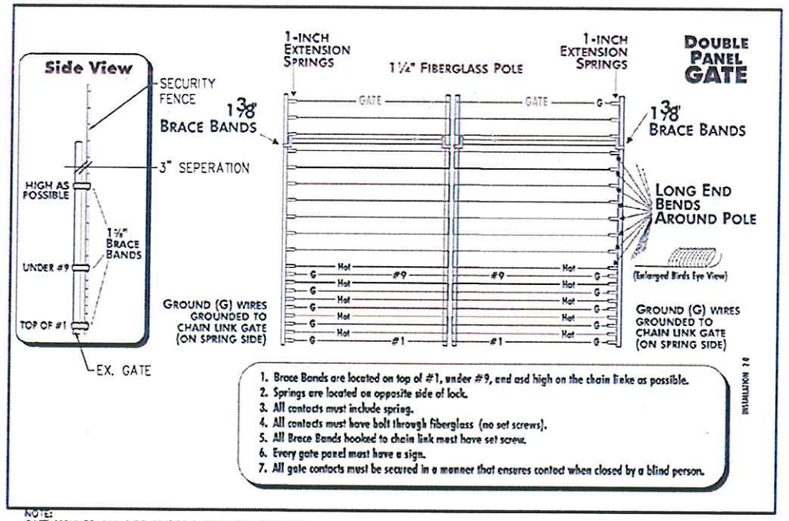

1. Brace Bands are located on top of #1, under #9, and and high on the chain links as possible.
2. Springs are located on opposite side of lock.
3. All contacts must include spring.
4. All contacts must have bolt through fiberglass (no set screws).
5. All Brace Bands hooked to chain link must have set screw.
6. Every gate panel must have a sign.
7. All gate contacts must be secured in a manner that ensures contact when closed by a blind person.

NOTE:
GATE MOUNTS WILL NOT AFFECT FUNCTIONALITY OF THE GATE(S).

GATE DETAIL

NTS

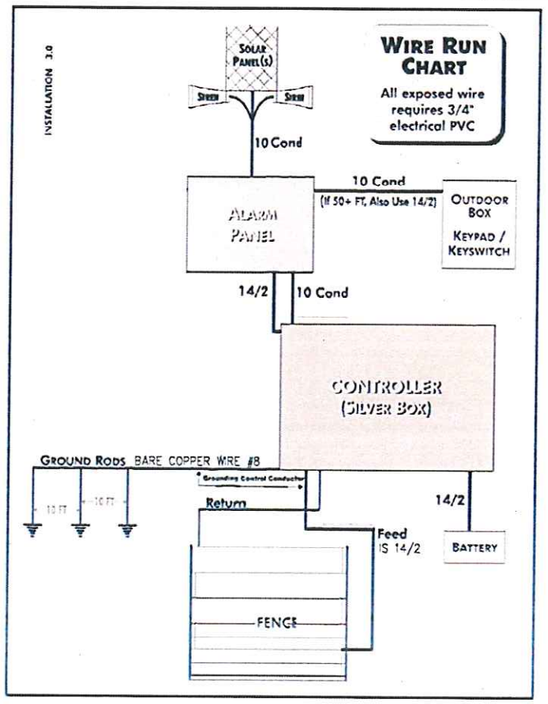

WIRE RUN DETAILS

NTS

OUTSIDE MOUNTED ELECTRONICS

MOUNT THREE EMPTY GALVANIZED SILVER BOXES TO A PAIR OF 3"ø GALVANIZED EMT ELECTRICAL CONDUIT STEEL POLES.

THE BOTTOM OF THE LOWEST BOX MUST BE AT LEAST 2 FEET ABOVE GROUND LEVEL, AND THE POLES MUST BE ANCHORED AT LEAST 5'-6" BELOW GROUND LEVEL.

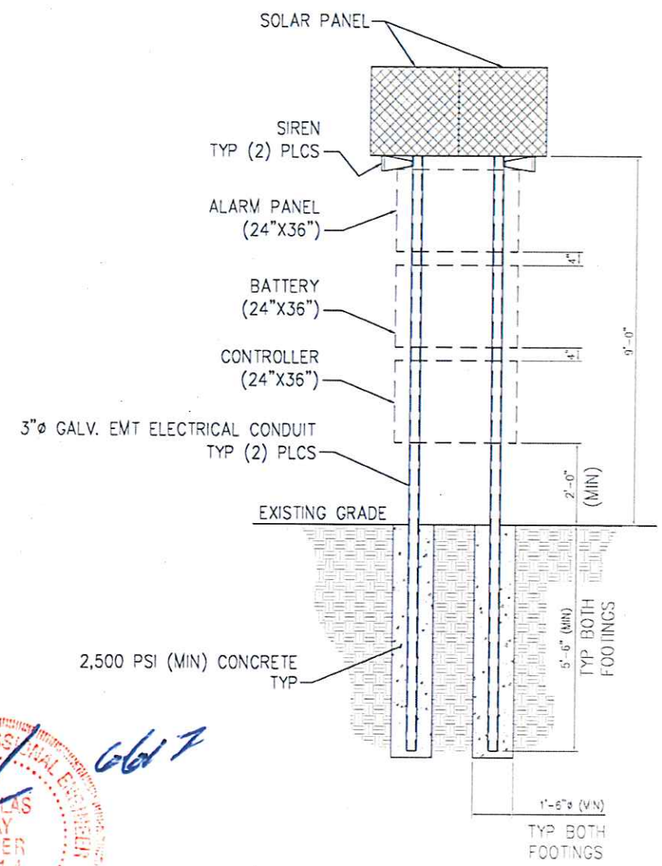

STEEL POLE DETAIL

REGISTERED PROFESSIONAL ENGINEER
NICHOLAS CLAY JASPER
16414
IOWA
Expires: 12/31/17

#	DATE / DESCRIPTION

Electric Guard Dog
7608 Fairfield Road
Columbia, SC 29203
PHONE: 803-786-6333
FAX: 803-404-5378

PROJECT: REQUEST TO AUTHORIZE AN ADDITION TO SECURITY SYSTEM
2802 S. 21ST STREET
COUNCIL BLUFFS, IA 51501
PN: 744402384003

SHEET TITLE: TYPICAL DETAILS

DATE: MAY 23, 2015

SCALE: N/A

SHEET
3 OF 4

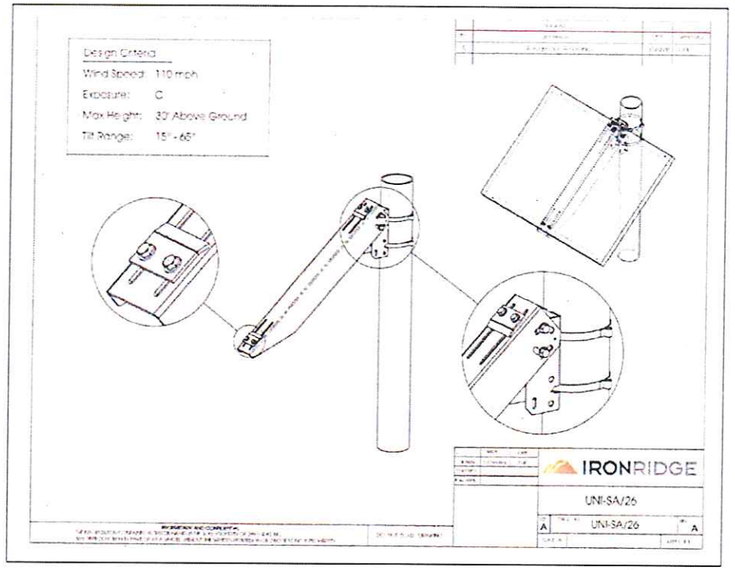

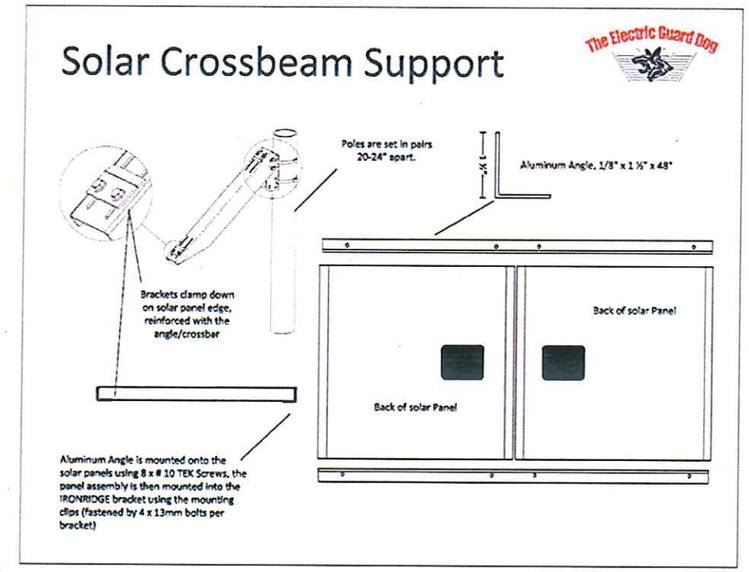

3 | Universal Single-Arm Side-of-Pole Mount UNI-SA/26.0 Installation Guide

4. Component List

The Universal Single-Arm Side-of-Pole Mount kit contains the following parts:

Bracket (51-3517-020)
Attaches to the pole with the hose clamps, providing the link between the pole and the module/arm assembly

Hose Clamps (27-5000-010) x2
Attach to the pole and hold the Bracket. These hose clamps are compatible with poles ranging from 2.0 inches to 4.5 inches

Arm (51-3517-015)
Attaches to the bracket, supporting the PV Module.

PV Module Clamps (50-8001-051) x2
Attach the PV Module to the Arm by clamping to the module's extrusion

Part	Qty	Part Number
PV Module Clamp Hardware Kit	1	29-5003-005
1/4-20 x 3/4" SS hex-cap bolt	2	23-2520-050
1/4 flat washer, SS	4	25-2502-000
1/4 split lock washer, SS	2	24-2501-000
1/4 hex nut, SS	2	24-2520-440
Arm to Bracket Fastening Kit	1	29-5005-000
5/16-18 x 3/4" SS hex cap bolt	4	23-3118-021
5/16 flat washer, SS	8	25-3102-000
5/16 split lock washer, SS	4	25-3101-000
5/16 hex nut, SS	4	25-3118-440

IronRidge ☒ 1495 Zephyr Ave ☒ Hayward, CA 94544 ☒ (800) 227-9523 ☒ www.ironridge.com

6.6.17

REGISTERED PROFESSIONAL ENGINEER
NICHOLAS JASPER
16414
IOWA
Expires: 12/31/17

#	DATE / DESCRIPTION

Electric Guard Dog
7608 Fairfield Road
Columbia, SC 29203
PHONE: 803-786-6333
FAX: 803-404-5378

PROJECT: REQUEST TO AUTHORIZE AN ADDITION TO SECURITY SYSTEM
2802 S. 21ST STREET
COUNCIL BLUFFS, IA 51501
PN: 744402384003

SHEET TITLE: TYPICAL DETAILS

DATE: MAY 23, 2017
SCALE: N/A

SHEET
4 OF 4